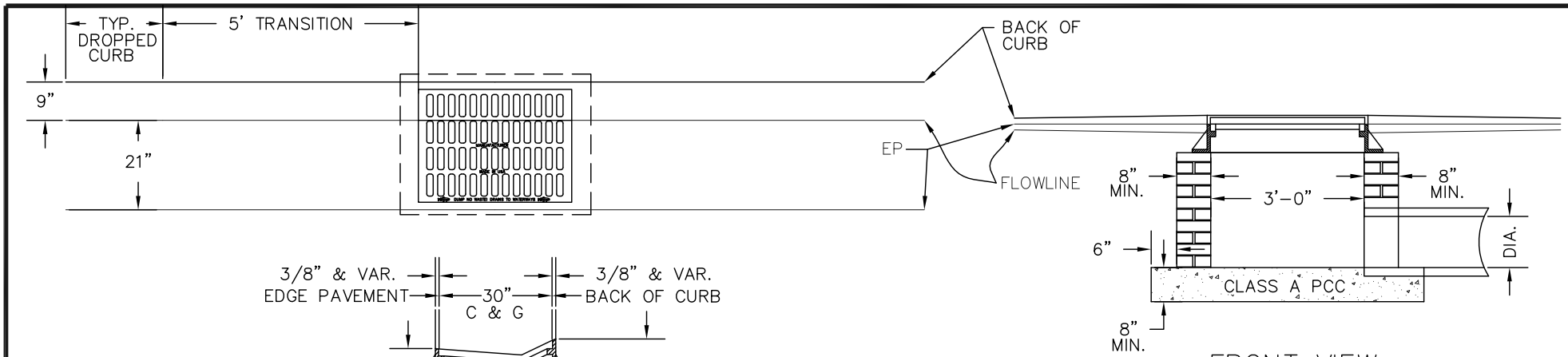

FRONT VIEW

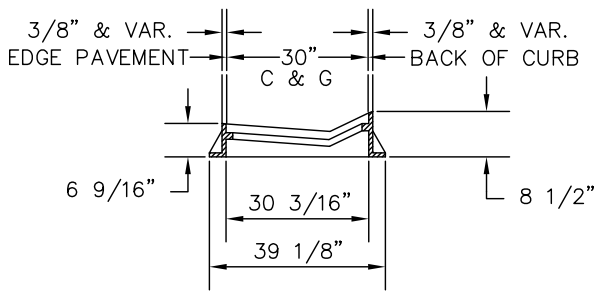

VIEWS – FRAME ORIENTATION

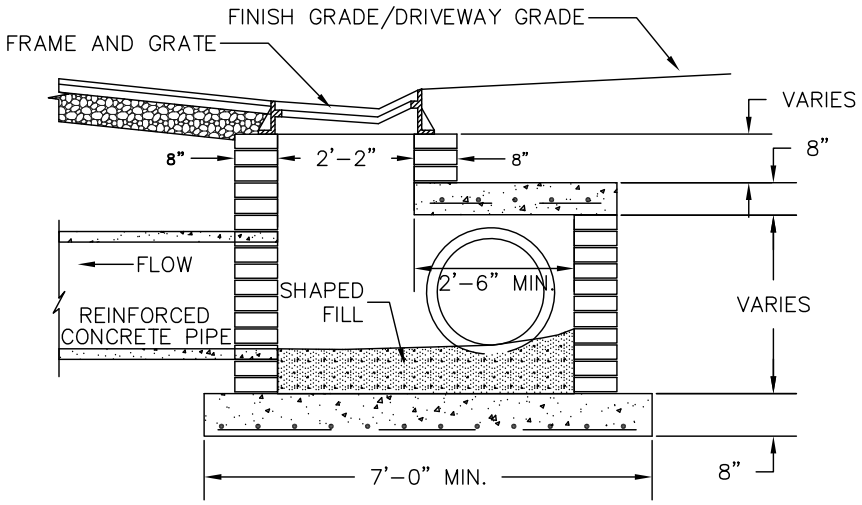

SECTION WITH DRAINAGE AT BACK OF CURB

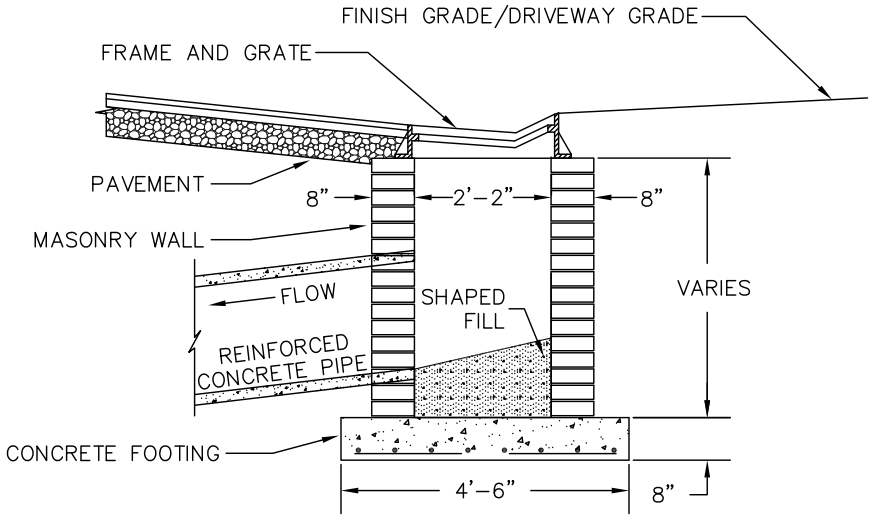

SECTION WITH DRAINAGE UNDER STREET

CITY OF HIGH POINT NORTH CAROLINA ENGINEERING SERVICES DEPARTMENT	ISSUED 03-20-07 REVISIONS	STANDARD DRAWING FOR DROPPED CURB & GUTTER INLET	DROP_CG_INL1.DWG 420.00
APPROVED MARCH 20, 2007 BKP DIRECTOR			SHEET 1 OF 2